REMOVABLE STEEL BOLLARDS – 4″ AND 6″

Removable steel bollards for access control and vehicle impact protection. Available in 4" and 6" diameters, both models use a core-drilled sleeve for secure installation and easy removal when temporary access is required.

SONCO™
SAFETY MARKETPLACE

Type: Removable Steel Bollard **Brand**: Post Guard **Model Number:** RB

TECHNICAL SPECIFICATIONS

	4″ Removable Bollard	6″ Removable Bollard
Outside Diameter (OD)	4.5″	6.63″
Weight	35 lbs	54 lbs
Overall Height	48″	
Height Above Ground	36″	
Base Type	Core-Drilled, Removable	
Embedment Sleeve	Standard sleeve included	11.25″ D × 12″ L sleeve included
Material	Carbon Steel	
Finish	Stainless Steel or Powder-Coated Yellow	
Color	Steel or Yellow	
Cap Type	Welded Steel Dome Cap	
Mounting Method	Core-Drilled Sleeve	
Country of Manufacture	U.S.A.	

WHY CHOOSE THIS MODEL?

- Heavy-duty protection with flexible, removable installation.
- Compatible with multiple site layouts and surface types.
- Long-lasting corrosion resistance from powder-coated finish.
- Available through SONCO with nationwide stock and distribution support.

USER OPERATION

- Installs into the embedded sleeve for quick setup or removal.
- Allows temporary access for maintenance or service vehicles.
- Provides durable impact resistance in high-traffic areas.

MAINTENANCE TIPS

- Keep sleeve opening clear of debris and moisture.
- Inspect coating and welds periodically; repaint if chipped or scratched.
- Check that the bollard fits correctly into the sleeve after use.

Contact SONCO for product availability, bulk orders, or compatibility details.

TECHNICAL DRAWING

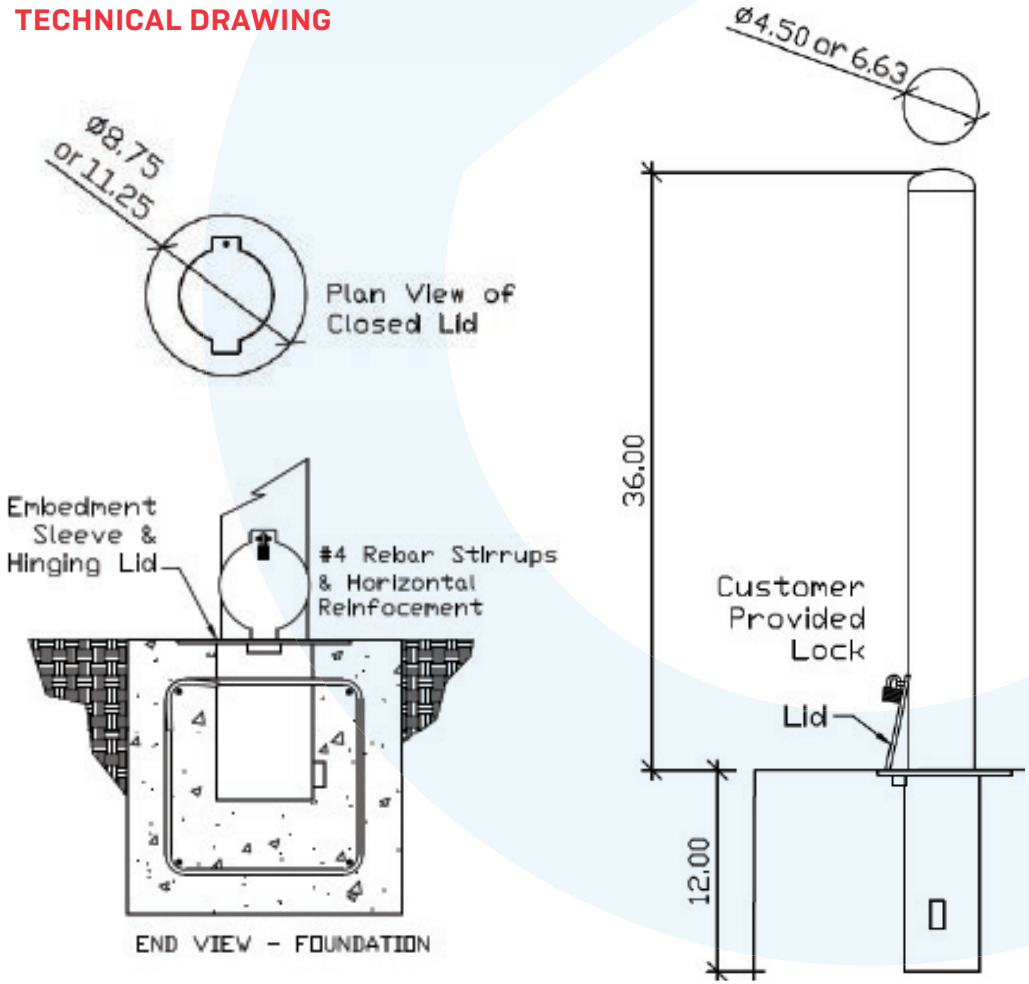

BUILD YOUR FULL SETUP

Parking Stops
Concrete and rubber models available in bulk.

Speed Bumps
Heavy-duty rubber options stocked for fast delivery.

Traffic Cones & Delineators
Sold in kits and truckload volumes.

888-766-2615 | sales@soncostore.com | www.soncostore.com | Sonco Worldwide, Inc. 9011 East Hampton Drive Capitol Heights, MD 20743